DIAPHRAGM SEALS

INTRODUCTION

REO*TEMP* Diaphragm Seals (or Chemical Seals) use a flexible barrier, or *diaphragm*, to isolate a pressure sensor (gauge, switch, transmitter, or transducer) from adverse effects of the process fluid.

Diaphragm seals are useful to:

1.) *Protect the sensor* from the process media (corrosive, abrasive, viscous, or crystallizing media)

2.) *Protect the process* from the sensor (sanitary process requiring clean-out, or high purity media).

HOW IT WORKS:

A diaphragm seal, when properly mounted to its sensor and filled, will accurately transmit process pressure to the instrument. Pressure exerted on the flexible diaphragm is transmitted hydraulically to the instrument through the fill fluid, which fills the void between the diaphragm and the instrument, (including the bourdon tube, in the case of a pressure gauge.)

APPLICATION CONSIDERATIONS: The following should be considered when choosing a diaphragm seal:

1. Process Characteristics: Pressure, temperature, (see tables, this page) chemical compatibility and viscosity.
2. Seal Mounting: Connection to process (threaded, flanged, clamped, in-line) Connection to instrument (usually NPT).
3. Ambient Characteristics: Temperature, corrosive atmosphere, etc.
4. Instrument Considerations: Sufficient fluid displacement is required to drive instrument through its full range (this means, for example, you can't put a large gauge on a small seal); remote instrument placement requires a capillary connecting instrument to seal.
5. Vacuum Considerations: High vacuums (over 25" Hg vac.) or vacuums with high temperatures require special fill selection, preparation, and procedures, as well as careful diaphragm selection.

NOTE: Improper selection may result in system failure and possible damage or injury. REO*TEMP* can provide application assistance, but final compatibility is the responsibility of the buyer. Proper selection of seal can reduce or eliminate any additional system error caused by adding a Diaphragm Seal to your instrument.

SEAL TYPES:

Standard Seals (pp 22-23): include Threaded off-line, threaded in-line, and flanged off-line types in many materials for a variety of applications:

Sanitary Seals (pg 28): are designed for food, pharmaceutical and other sanitary applications. Available to fit most standard piping systems, including "Tri-clamp", "I" line, and others. For straight- thru and in-line sanitary seals with no crevices, see our lit #ILS.

Mini-Seals (pg 27): are designed for low-displacement applications where size or economy are considerations.

SPECIAL DESIGNS: REO*TEMP* is ready to work with you on any high-performance diaphragm seal application, (that might exceed the stated limit below) such as high vacuum, high temperature, high sterility, custom design or high static pressure with a low differential span, or high vacuum with high temperature.

Temperature Limits

Maximum Temperature	Diaphragm Material	Lower Housing
650°F	Welded metal	Metal
450°F	Teflon	Metal
300°F	Viton	Metal
140°F	–	Nonmetal

Pressure Limits

	psi	Lower Housing	
Maximum working pressure	1,500	metal, with ss bolting	(at 100°F)
	2,500	metal, std bolting	(at 100°F)
	5,000	metal, hi-press bolting	(at 100°F)
	per flange rating	ASA flange	(per flange spec)
	300	non-metallic	(at 140°F)
	Diaphragm	**size 5 seal**	**size 6 seal**
Min. working Pressure	Metal	25 psi	10 psi
	Teflon	20 psi	8" W.C.
	Viton	5" W.C.	n/a
Vacuum Limits	Metal	-21" Hg	-24" Hg
	Teflon	-23" Hg	-26" Hg
	Viton	-29" Hg	n/a

MATERIALS: Lower housings: 316SS standard, with a large selection to suit a wide variety of applications (see Table 1, pg. 23)

Diaphragms: Standard metal diaphragms are convoluted and made of 316SS. Many other materials are available, for corrosion resistance or extra sensitivity. (See Table 6, pg. 23)

Gaskets: Standard gaskets are teflon on the process side of diaphragm (grafoil for hi temp.), and viton on the fill side. Other materials are available.

REOTEMP INSTRUMENTS
Telephone: (800) 648-7737 FAX (858) 784-0720 • sales@reotemp.com • www.reotemp.com

DIAPHRAGM SEALS

HOW TO ORDER

TABLE 1 Seal Series	TABLE 2 Seal Size	TABLE 3 Configuration	TABLE 4 Instrument Connection	TABLE 5 Process Connection	TABLE 6 Diaphragm Material	TABLE 7 Lower (process) Housing Material	TABLE 8 Upper (instrument) Housing Material
EXAMPLE: W	5	15	4	2	S	S	C

TABLE 1 Seal Series

W - Welded metal diaphragm

T - Teflon diaphragm (high sensitivity, chemical resistance)

V - Viton diaphragm - (most sensitive, for low pressures)

TABLE 2 Seal Size

5 - Standard size
Seal dia. = 3.25" in threaded models
Diaphragm dia. = 2.25"

6 - Large size - (Preferred for low pressure, hi displacement, or hi sensitivity.)
Seal dia. = 4" in threaded models
Diaphragm dia. = 3"

7 - Large size
Seal diameter; 5.2"
Diaphragm dia. = 4.1"

TABLE 4 Instrument Connection

4 - 1/4" NPTF
2 - 1/2" NPTF

TABLE 5 Process Connection

4 - 1/4" NPTF
2 - 1/2" NPTF
3 - 3/4" NPTF
1 - 1" NPTF

F - Flanged - specify flange size and pressure rating (e.g. 1 1/2", 150 lb)
or insert "V" codes from Table A see p. 24
(e.g. V41=1 1/2" 150#)

TABLE 3 - Configuration

Threaded, Off-Line

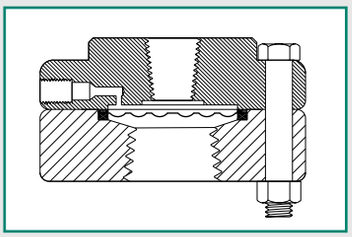

10 - Replaceable diaphragm - non cleanout (not available with series "W")

11 - Same as 10, with flush port

15 - Cleanout style - lower housing can be removed without losing fill. (Available with Series W, T, V)

16 - Same as 15, with flush port

Flanged, Off-Line - with cleanout

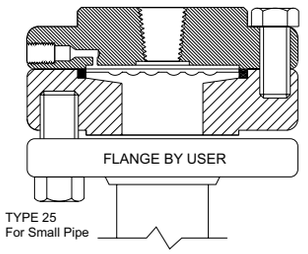

TYPE 25
For Small Pipe

25 - for 1/2", 3/4" pipe size (1" in size 6)

26 - Same as 25, with flush port

30 - for 1 1/2" pipe to 3" pipe size (1" in size 5)

31 - Same as 31, with flush port

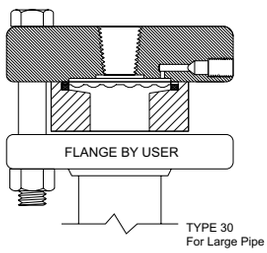

TYPE 30
For Large Pipe

In-Line, Flow-Thru - with cleanout

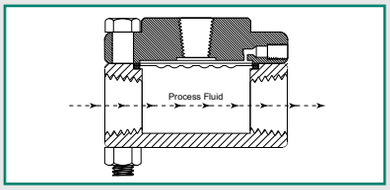

35 - Threaded (shown) - for 1/4" to 1" pipe

40 - Socket Weld - for 1/4" to 1" pipe

45 - Saddle Weld - for 1" to 8" pipe

50 - Butt Weld - for 1" to 12" pipe

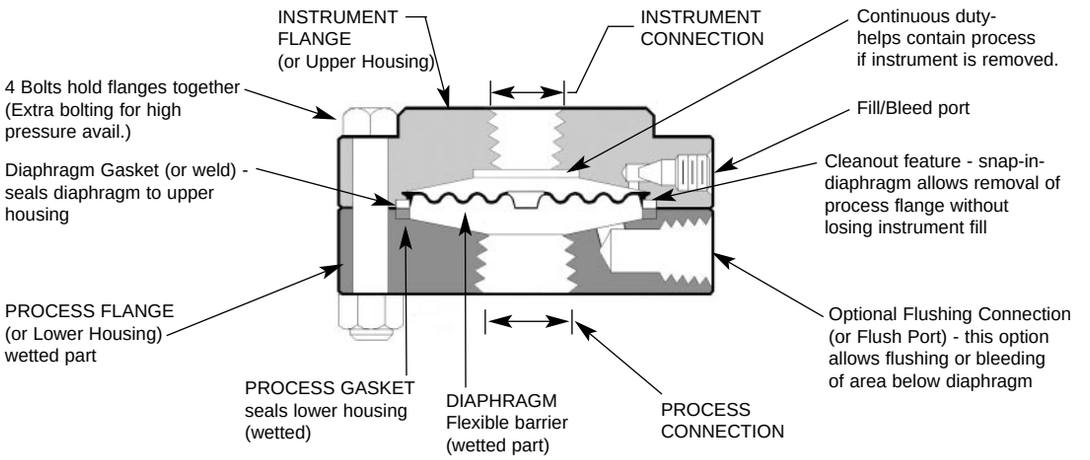

TABLE 6
Diaphragm Material (wetted)

MOST COMMON

- **S** - 316 S.S.
- **T** - Teflon
- * **V** - Viton
- **D** - Carpenter 20
- * **F** - 304 S.S.
- **G** - Hastelloy B
- **H** - Hastelloy C
- **J** - Titanium
- **L** - 316LSS, teflon coated
- **M** - Monel
- **N** - Nickel
- **U** - Tantalum
- **X** - Gold Plated Diaphragm
- * **Y** - Inconel

**Size 5 only.*

TABLE 7
Lower Housing Material (wetted)

MOST COMMON

- **S** - 316 S.S.
- **T** - Teflon
- * **L** - Teflon lined
- **Z** - PVC
- **B** - Brass
- **C** - Steel
- **D** - Carpenter 20
- **F** - 304 S.S.
- **G** - Hastelloy B
- **H** - Hastelloy C-276
- **J** - Titanium
- **K** - Kynar
- **M** - Monel
- **N** - Nickel
- **P** - Polypropylene
- **U** - Tantalum
- **UL** - Tantalum Lined
- **W** - CPVC
- **Y** - Inconel

**Available only on types 25 & 30, 1" and larger.*

TABLE 8
Upper Housing Material (including bolts)

- **C** - Carbon Steel (standard)
- **S** - 316 Stainless
- **F** - 304 Stainless

OPTIONS:

- Hi Pressure bolting
- Non-Stick Teflon coating on metal diaphragm
- Socket weld connections
- High temp. gasketing
- Stainless steel bolting (reduces pressure rating up to 50%)
- Capillary Lines

Fill Fluids

Fill Fluids should be chosen with care. The fluid must be compatible with the process medium in case the diaphragm is ruptured. Compatibility of fill fluid with process is the user's responsibility.

FLUID	TEMPERATURE LIMITS	VISCOSITY, CS, 77° F	NOTES
Silicone, DC 200	-50 to 450° F	20	our standard fill
Silicone, DC 704	+50 to 600° F	44	Hi-temp fill
Silicone, DC 710	+30 to 700° F	500	Hi-temp fill
Neobee M-20	-4 to 320° F	10	food grade
Glycerin	+30 to 300° F	1110	for food; not recomm. for capillary
Halocarbon	-40 to 400° F	6	inert, for use with oxidizers (must not contact Al, Mg)

not to be used with strong oxidizers, such as chlorine, oxygen, etc.

Other fills available: consult factory.

Credits: Viton, Teflon, Kynar, TM DuPont, Inc.; Carpenter 20 - TM Carpenter Steel Co.; Inconel, Monel - TM Huntington Alloys, Inc.; Hastelloy - TM Cabot Corp.; Halocarbon - TM Halocarbon Corp.

An Authorized Pressure Sensor Repair Facility

REOTEMP

INSTRUMENTS

SERIES 40

- Protects and isolates instrumentation
- Full 360° pressure reading
- Self-cleaning, flexing action
- Won't clog like traditional diaphragm seals
- Excellent pump protection

Materials of Construction

- Body (non-wetted) available in Carbon Steel or 316 Stainless Steel
- ANSI B16.5 Class 150 Flanges in Carbon Steel, 316 Stainless Steel, PVC, or Teflon® Coated Carbon Steel
- Sleeves available in Pure Gum Rubber, Neoprene, Chlorobutyl, Buna-N, Hypalon®, Viton®, EPDM, White Food-Grade Elastomers, Teflon®-coated Buna-N or Teflon®-coated Viton®
- Fill fluid: Silicone Oil (400°F), Ethylene Glycol& Water (200°F), Vegetable Oil (230°F)

Red Valve's Series 40 and Series 42 Pressure Sensors are the industry standards for protecting instrumentation, and assuring accurate, dependable pressure measurement of slurry and corrosive fluids.

The line pressure is sensed 360° through the flexible rubber sleeve. The captive fluid is displaced through the pressure sensor body to the instrument's Bourdon tube. All instruments are isolated and protected from the process, assuring positive and accurate readings.

The full-faced, thru-bolted Series 40 installs directly in-line. Costly installation and maintenance of pipe stands and saddle welds, which are required when installing antiquated diaphragm seals, are eliminated.

The thru-bolted Series 40 can be mounted in any flow direction, submerged in a tank, or mounted with a blind flange as a dead end to monitor tank levels.

The Red Valve standard gauge is bottom mounted, with a 21/2" diameter steel case; accuracy of this gauge is ±1% of the gauge reading. A 0-100 psi gauge is furnished as standard unless otherwise specified. 0-200 psi gauges are optional at no additional cost. All Red Valve Pressure Sensors and gauges are tested and calibrated through the mid-range to assure the highest level of accuracy. Pressure gauges, transmitters, transducers, recorders, differential pressure or vacuum switches are factory filled and mounted to the Series 40.

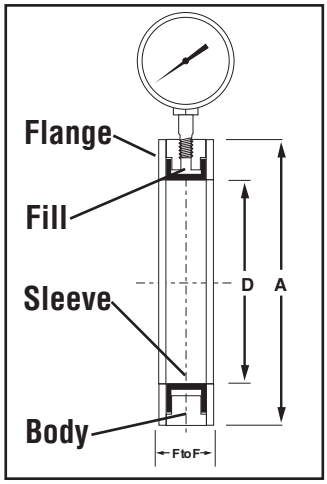

Dimensions Series 40

Size D	Outside Diameter A	Length F to F	100°F Working Pressure (psi)*	Weight (lbs)
1"	4 1/2"	1 7/8"	275	6
1 1/2"	5"	1 7/8"	275	8
2"	6"	1 7/8"	275	12
2 1/2"	7"	1 7/8"	275	16
3"	7 1/2"	1 7/8"	275	18
4"	9"	2 1/8"	275	27
5"	10"	2 1/4"	275	32
6"	11"	2 1/4"	275	37
8"	13 1/2"	2 1/2"	275	58

*Higher working pressures available. PVC unit has a working pressure of 200 psi

Contact REO*TEMP* for sizes 10" through 36"

Ph: (800) 648-7737 www.reotemp.com sales@reotemp.com Fx: (858) 784-0720

An Authorized Pressure Sensor Repair Facility

REOTEMP

INSTRUMENTS

SERIES 48

- Wafer design reduces costs
- Protects and isolates instrumentation
- Fits ANSI 150 and 300 flanges
- Lightweight design

Red Valve's Series 48 Pressure Sensor protects and isolates instrumentation, eliminating plugging and fouling that can occur in slurry and hard-to-gauge liquid applications. The economical Series 48 is designed to fit inside the bolt pattern of the pipe flanges, allowing for ease of installation and reducing the size of the unit. Series 48 sensors are designed to fit Class 150 and 300 flange drilling, DIN or BS NP10 piping systems.

Reliable, accurate instrument readings are often difficult or even impossible to obtain in pipelines carrying slurry, solids or chemical process. Standard diaphragm seals are vulnerable to plugging by debris or deposits and only give a pressure reading from one small area. With the Series 48 Pressure Sensor, these problems are eliminated.

The principle of operation is that line pressure is sensed through a flexible rubber sleeve which is a full 360° circumference of the pipe I.D. The captive fluid is displaced through the Series 48 Pressure Sensor body to the instrument's Bourdon tube. All instrumentation is protected from the process, which ensures accurate, repeatable readings.

Materials of Construction

- Carbon Steel, 316 Stainless Steel Body
- Flanges: Carbon Steel, 316 Stainless Steel, PVC or Teflon®-coated Carbon Steel
- Sleeves available in Pure Gum Rubber, Neoprene, Chlorobutyl, Buna-N, Hypalon®, Viton®, EPDM, White Food-Grade Elastomers, Teflon®-coated Buna-N or Teflon®-coated Viton®
- Fill fluid: silicone oil. Contact factory for other fill options.

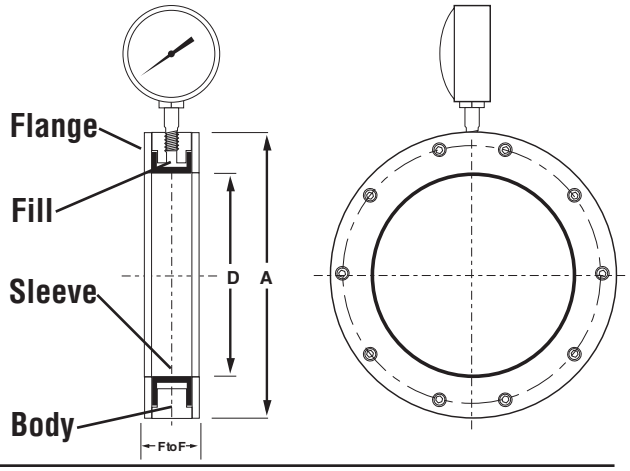

Dimensions Series 48

Size D	Outside Diameter A	Length F to F	100°F Working Pressure (psi)*	Weight (lbs)
2"	4"	1 7/8"	720	3
2 1/2"	4 3/4"	1 7/8"	720	5
3"	5 1/4"	1 7/8"	720	6
4"	6 3/4"	2 1/8"	720	9
6"	8 5/8"	2 1/4"	720	12
8"	10 7/8"	2 1/2"	720	16
10"	13 1/4"	2 3/4"	720	22
12"	16"	3"	720	25
14"	17 5/8"	3"	720	50
16"	20"	3"	720	60
18"	21 1/2"	3"	720	70
20"	23 3/4"	3"	720	80
24"	28 1/8"	3"	720	115
30"	34 5/8"	3"	720	150
36"	41 1/8"	4"	720	248
42"	47 1/8"	4"	720	319
48"	54 3/8"	4"	720	392

*Higher working pressures available. PVC unit has a working pressure of 200 psi

Ph: (800) 648-7737 www.reotemp.com sales@reotemp.com Fx: (858) 784-0720

An Authorized Pressure Sensor Repair Facility

REOTEMP INSTRUMENTS

Series 42/742 Diaphragm Seal

- **Series 742 can be flushed or rodded clean without removal from line or disassembly**
- **Protects and isolates instrumentation from chemical or slurry plugging**
- **Lower installation and operating costs**

Materials of Construction

- **Body (Non-Wetted) and Upper and Lower Case (Wetted) - Carbon Steel, 316 Stainless Steel, or PVC**
- **Sleeves Available in Pure Gum Rubber, Neo prene, Hypalon®, Chlorobutyl, Buna-N, Viton®, EPDM, Food Grade Elastomers, Teflon® coated Buna-N, or Teflon® coated Viton®**
- **Fill Fluid; Ethylene Glycol & Water (200° F), Vegetable Oil (230° F), Silicone Oil (400° F)**

Series 42

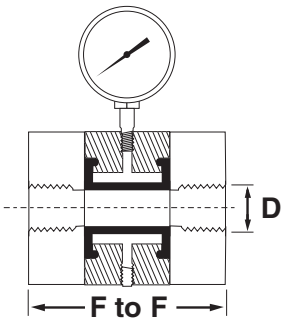

Series 742

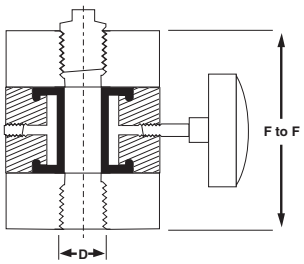

Red Valve's Series 42 Pressure Sensor and Series 742 Diaphragm Seal isolate and provide accurate instrument reading of gauges, transmitters, and pressure switches, making them ideal for use in chemical or slurry service. The Series 42 and Series 742 can be mounted in any flow direction, and have threaded ends manufactured to standard NPT pipetap dimensions for smaller pipelines. The principle of operation is simple. As process pressure is sensed by the 360° elastomer sleeve, the captive fluid transfers the process pressure to the instrument, providing a consistent, accurate reading.

The Series 742 offers a significant advantage over traditional diaphragm seals. When installed perpendicular to the pipeline, the Series 742 can be isolated so that in the event of plug-ging, the elastomer slurry ring area, which isolates the instru-ment, can be flushed (Figure 1) or rodded clean (Figure 2).

Series 42 Pressure Sensors and Series 742 Diaphragm Seals are available in sizes $^1/_2$" through 2". The Series 42 features a top-mounted gauge, while the Series 742 is supplied with a standard back mounted gauge. A complete Series 742 Diaphragm Seal, including optional isolation ball valve, is available for immediate delivery.

The Only Diaphragm Seal That Can Be Flushed Without Removal From The Line

Figure 1 *Figure 2*

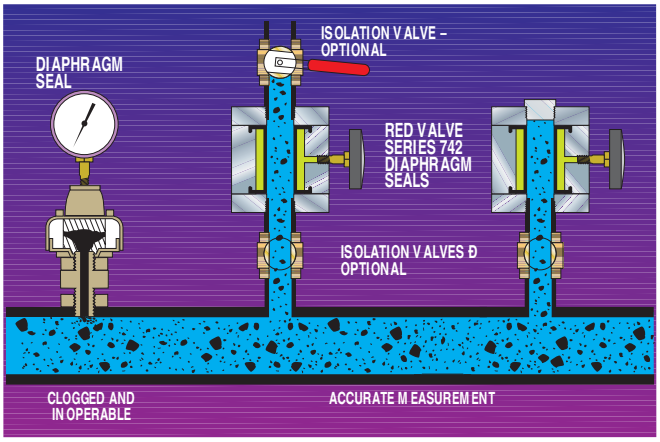

DIMENSIONS SERIES 42/742

** PVC Unit has Working Pressure of 200 psi; Higher Working Pressure Available.*

Size D	Length F to F	Working* Pressure (psi)	Weight (lbs)
$^1/_2$"	$2^7/_8$"	720	5
1"	$3^3/_8$"	720	6
$1^1/_2$"	$3^3/_8$"	720	15
2"	$3^3/_8$"	720	20

Ph: (800) 648-7737 www.reotemp.com sales@reotemp.com Fx: (858) 784-0720

An Authorized Pressure Sensor Repair Facility

REOTEMP INSTRUMENTS

Founded in 1953 — Red Valve Company, Inc.

Pressure Sensor SERIES 40W

- No wetted metal parts
- No gaskets required
- Non-clogging, protects instrumentation
- Bolt through design - positive alignment, secure connection

The Series 40W pressure sensor isolates and protects instrumentation. The full-port design eliminates clogging, ensuring accurate pressure measurement under the most difficult conditions. The elastomer sleeve senses pressure 360 degrees around the inner circumference of the unit, overcoming problems like plugging and fouling of traditional diaphragm seals. Combinations of elastomers and sensing fluids provide an operating range of –20º F to +400º F. Standard units are rated at 300 psi operating pressure and 450 psi surge pressure. All areas exposed to the process media are elastomer covered. Depending on the type of media being handled, elastomers can be specified to offer the best combination of chemical and abrasion resistance characteristics. The elastomer sleeve extends to the full face of the flange, eliminating the need for additional gaskets.

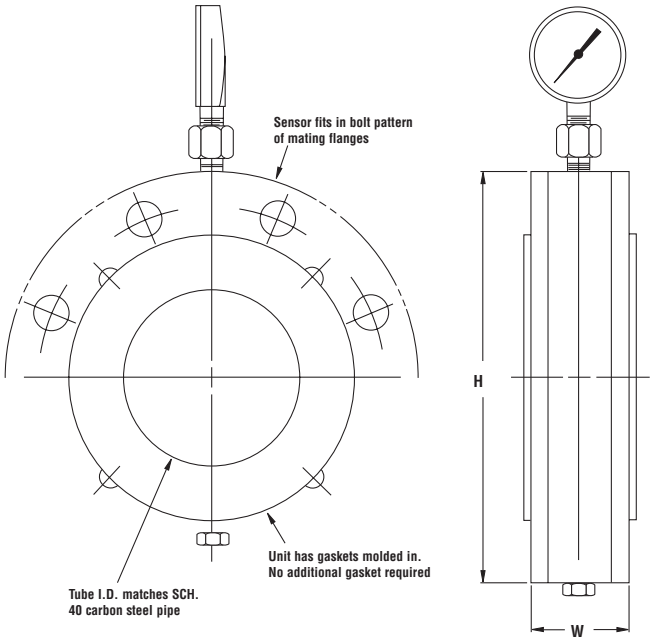

Materials of Construction

- ANSI Class 125/150
- Body available in Carbon or Stainless Steel
- Sleeve available in Pure Gum Rubber, Neoprene, Hypalon®, Chlorobutyl, Buna-N, EPDM and Viton®

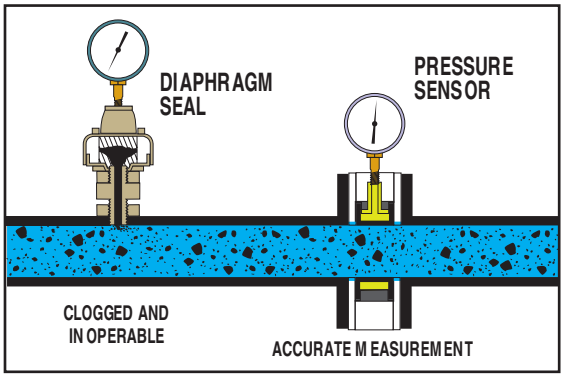

Series 40W Pressure Sensor

Valve Size	H	W
1"	4 1/2"	1 7/8"
1 1/2"	5"	1 7/8"
2"	6"	1 7/8"
2 1/2"	7"	1 7/8"
3"	7 1/2"	1 7/8"
4"	9"	2 1/8"
6"	11"	2 1/4"
8"	13 1/2"	2 1/2"

If size larger than 8" is required, see Red Valve Series 40 and Series 48.

Ph: (800) 648-7737 www.reotemp.com sales@reotemp.com Fx: (858) 784-0720

An Authorized Pressure Sensor Repair Facility

REOTEMP INSTRUMENTS

Founded in 1953
Red Valve Company, Inc.

Pressure Sensor SERIES 48W

- **No wetted metal parts**
- **No gaskets required**
- **Non-clogging, protects instrumentation**
- **Wafer style**

The Series 48W pressure sensor isolates and protects instrumentation. The full-port design eliminates clogging, ensuring accurate pressure measurement under the most difficult conditions. The elastomer sleeve senses pressure 360 degrees around the inner circumference of the unit, overcoming problems like plugging and fouling of traditional diaphragm seals.

Combinations of elastomers and sensing fluids provide an operating range of –20° F to +400° F. Standard units are rated at 300 psi operating pressure and 450 psi surge pressure. All areas exposed to the process media are elastomer covered. Depending on the type of media being handled, elastomers can be specified to offer the best combination of chemical and abrasion resistance characteristics. The elastomer sleeve extends to the full face of the flange, eliminating the need for additional gaskets.

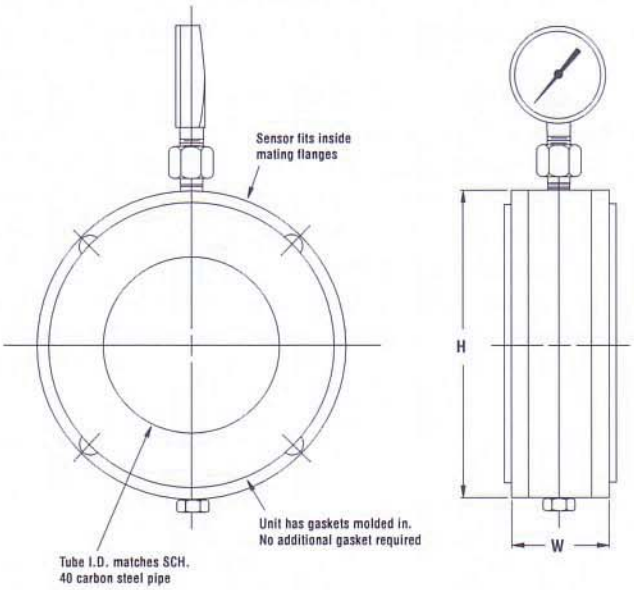

Materials of Construction

- **ANSI Class 125/150**
- **Body available in Carbon or Stainless Steel**
- **Sleeve available in Pure Gum Rubber, Neoprene, Hypalon®, Chlorobutyl, Buna-N, EPDM and Viton®**

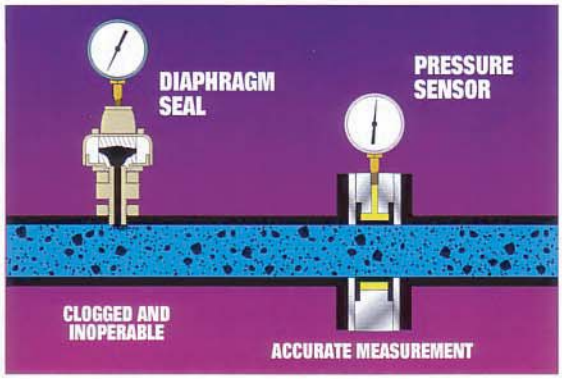

Series 48W Pressure Sensor

Valve Size	H	W
1″	2 1/2″	1 7/8″
1 1/2″	3 1/4″	1 7/8″
2″	4″	1 7/8″
2 1/2″	4 3/4″	1 7/8″
3″	5 1/4″	1 7/8″
4″	6 3/4″	2 1/8″
6″	8 5/8″	2 1/4″
8″	10 7/8″	2 1/4″
10″	13 1/4″	2 13/16″

* Larger sizes available upon request.

Ph: (800) 648-7737 www.reotemp.com sales@reotemp.com Fx: (858) 784-0720

An Authorized Pressure Sensor Repair Facility

REOTEMP INSTRUMENTS

Tank Level Sensor **SERIES 42TL**

- **Accurate Dependable Level Readings ± 2"**
- **Can be flushed or rodded clean without removing from tank or dissembly**
- **Full 360° pressure reading**
- **Integral LED display available**
- **Simple design**
- **Available for both vented and pressurized tanks**
- **4-20 mA output**

The Red Valve Tank Level Sensors are not affected by foaming, ice and other conditions that can cause errors in Ultrasonic and capacitance Level Sensors. The Red Valve Tank Level Sensor uses a high sensitivity, solid state, pressure transmitter that is completely isolated from the process fluid by an elastomer sleeve that transmits pressure through a fluid fill.

The Pressure Transmitter is available to sense gauge pressure for vented tanks and differential pressure for pressurized tanks. It can easily be calibrated for process fluid density or specific gravity in any height of tank. The output signal is 4-20 mA. An integral LED display is available and can be calibrated in virtually any units, e.g. percentages, inches H_20, etc.

The elastomer diaphragm provides maximum surface area with minimum diameter allowing installation close to the bottom of the tank. The sensor can also be "rodded" from the outside of the tank to the inside of the tank in the event of a severe blockage.

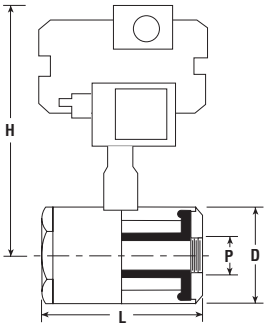

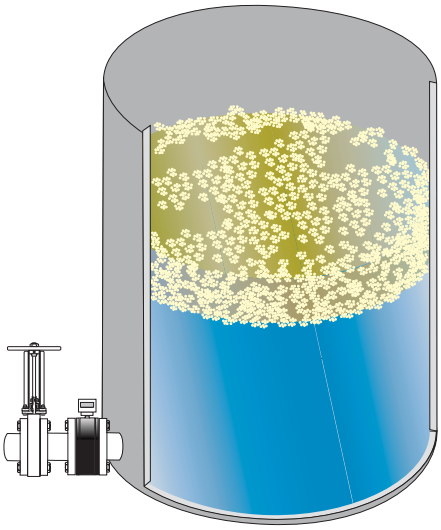

Materials of Construction

- **Body and Flanges**
  Carbon Steel, optional 316 Stainless Steel
- **Elastomer Diaphragm**
  Buna-N, EPDM, Viton™, Food Grade Rubber
- **Fill Fluid**
  Silicone Oil

DIMENSIONS SERIES 2642

SENSOR SIZE	P PIPE THREADED	D BODY DIA	L BODY LENGTH	H
2"	2"NPT	4"	7"	9.5"
3"	3"NPT	5"	9.44"	10"

Ph: (800) 648-7737 www.reotemp.com sales@reotemp.com Fx: (858) 784-0720

An Authorized Pressure Sensor Repair Facility

REOTEMP INSTRUMENTS

Tank Level Sensor **SERIES 40TL-M**

- **Accurate Dependable Level Readings ± 2"**
- **Can be flushed or rodded clean without removing from tank or dissembly**
- **Full 360° pressure reading**
- **Integral LED display available**
- **Simple design**
- **Available for both vented and pressurized tanks**
- **4-20 mA output**

The Red Valve Tank Level Sensors are not affected by foaming, ice and other conditions that can cause errors in Ultrasonic and capacitance Level Sensors. The Red Valve Tank Level Sensor uses a high sensitivity, solid state, pressure transmitter that is completely isolated from the process fluid by an elastomer sleeve that transmits pressure through a fluid fill.

The Pressure Transmitter is available to sense gauge pressure for vented tanks and differential pressure for pressurized tanks. It can easily be calibrated for process fluid density or specific gravity in any height of tank. The output signal is 4-20 mA. An integral LED display is available and can be calibrated in virtually any units, e.g. percentages, inches H_20, etc.

The elastomer diaphragm provides maximum surface area with minimum diameter allowing installation close to the bottom of the tank. The sensor can also be "rodded" from the outside of the tank to the inside of the tank, if necessary, in the event of severe blockage.

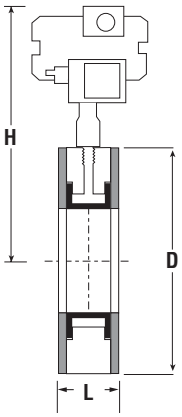

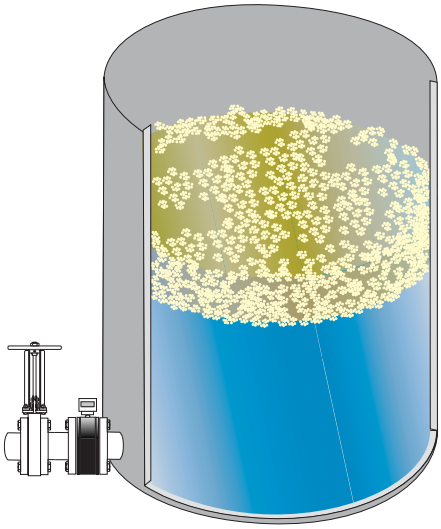

Materials of Construction

- **Body and Flanges**
  Carbon Steel, optional 316 Stainless Steel
- **Elastomer Diaphragm**
  Buna-N, EPDM, Viton®, Food Grade Rubber
- **Fill Fluid**
  Silicone Oil

DIMENSIONS SERIES 40TL-M

SENSOR SIZE	FLANGE SPECIFICATION	D BODY DIA	L FACE TO FACE	H HEIGHT
50 mm	DIN 2632 PN 10	165 mm	48 mm	266 mm
80 mm	DIN 2632 PN 10	200 mm	48 mm	283 mm
100 mm	DIN 2632 PN 10	220 mm	54 mm	293 mm

Ph: (800) 648-7737 www.reotemp.com sales@reotemp.com Fx: (858) 784-0720

An Authorized Pressure Sensor Repair Facility

REOTEMP INSTRUMENTS

Tank Level Sensor **SERIES 42TL**

- **Accurate Dependable Level Readings ± 2"**
- **Can be flushed or rodded clean without removing from tank or dissembly**
- **Full 360° pressure reading**
- **Integral LED display available**
- **Simple design**
- **Available for both vented and pressurized tanks**
- **4-20 mA output**

The Red Valve Tank Level Sensors are not affected by foaming, ice and other conditions that can cause errors in Ultrasonic and capacitance Level Sensors. The Red Valve Tank Level Sensor uses a high sensitivity, solid state, pressure transmitter that is completely isolated from the process fluid by an elastomer sleeve that transmits pressure through a fluid fill.

The Pressure Transmitter is available to sense gauge pressure for vented tanks and differential pressure for pressurized tanks. It can easily be calibrated for process fluid density or specific gravity in any height of tank. The output signal is 4-20 mA. An integral LED display is available and can be calibrated in virtually any units, e.g. percentages, inches H_20, etc.

The elastomer diaphragm provides maximum surface area with minimum diameter allowing installation close to the bottom of the tank. The sensor can also be "rodded" from the outside of the tank to the inside of the tank in the event of a severe blockage.

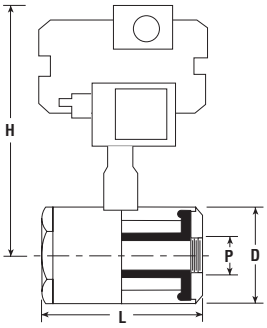

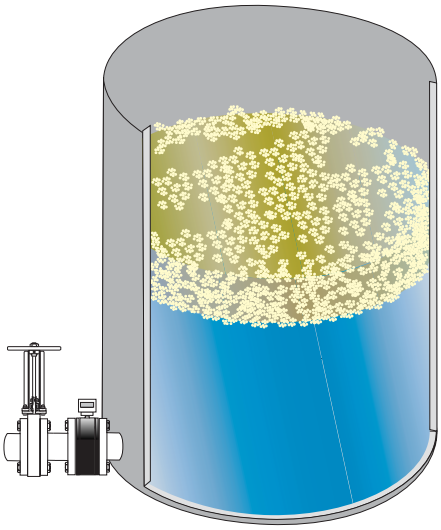

Materials of Construction

- **Body and Flanges**
  Carbon Steel, optional 316 Stainless Steel
- **Elastomer Diaphragm**
  Buna-N, EPDM, Viton™, Food Grade Rubber
- **Fill Fluid**
  Silicone Oil

DIMENSIONS SERIES 2642

SENSOR SIZE	P PIPE THREADED	D BODY DIA	L BODY LENGTH	H
2"	2"NPT	4"	7"	9.5"
3"	3"NPT	5"	9.44"	10"

Ph: (800) 648-7737 www.reotemp.com sales@reotemp.com Fx: (858) 784-0720

MINI SEALS

MINI-SEALS are all-welded, gasketless, threaded off-line seals. The mini-seal is an economical choice for isolation of smaller gauges, or where high sensitivity is not required.

MINI SEAL

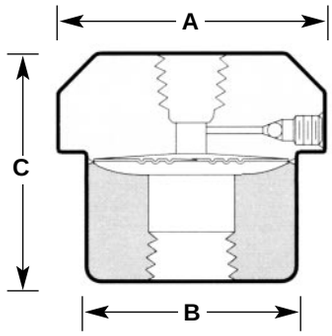

	A	B	C	Min. Range
4G	1.73”	1.5”	1.5”	0-100 psi
6G	2.25”	1.95”	1.6”	0-15 psi
4H	2.0”	1.75”	1.6”	0-100 psi

HOW TO ORDER:

Size:
- **4G** - Low volume, for up to 3 1/2” gauge. Max 2000 psi @ 100° F
- **6G** - Std. volume with larger diaphragm, for up to 4 1/2” gauge. Max 1,000 psi
- **4H** - High Pressure, for up to 3 1/2” gauge. Max 5,000 psi @ 100° F

Instrument Connection (Female NPT):
- **4** = 1/4” NPT
- **2** = 1/2” NPT

Process Connection (Female NPT):
- **4** - 1/4” NPT 4M = 1/4” NPT Male
- **2** - 1/2” NPT 2M = 1/2” NPT Male

Material:
- **S** = 316 Stainless (Standard)
- **H** = Hastelloy C
- **F** = 304 Stainless

Options:
- **F** = Flushing Connection

MS - 4 G - 4 4 S

SANITARY IN-LINE PRESSURE SEALS

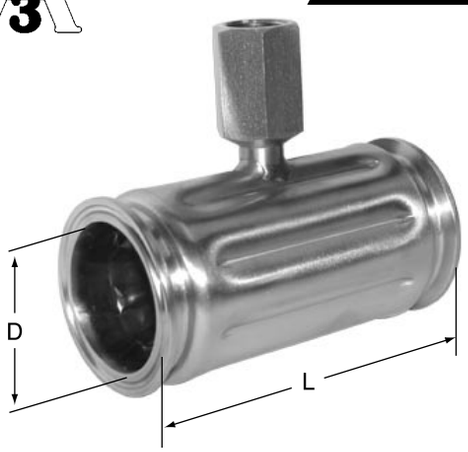

REO*TEMP* IN-LINE SEALS are the solution to many difficult pressure measurement applications. These seals are designed to 3-A standards, and allow unobstructed flow-through of process media.

TO ORDER: Tri-Clamp type, 1/4" NPT conn., 316SS

Pipe Size (D)	Tri-Clamp Conn.	Part Number	L (length)
1/2"	1/2"	ILS-TC05	7.87"
3/4"	3/4"	ILS-TC75	4.33"
1"	1"	ILS-TC10	4.33"
1 1/2"	1.5"	ILS-TC15	4.33"
2"	2"	ILS-TC20	4.33"
3"	3"	ILS-TC25	2.36"

Specifications:

Pipe material:	316LSS
Diaphragm Material:	316LSS standard (other material available on request)
Instrument Connections:	1/4" NPT std., (1/2" NPT, BSP threads cooling element or capillary line available)
Pipe connections:	Tri-clamp, (ANSI Flange (or metric connection types avail. - consult factory)
Pressure Limits:	600 psi (other styles to 6,000 psi)
Pipe sizes:	1/2" to 4"
Filling Fluids:	Glycerin, vegetable oil or any food - compatible fluid
Leak checking:	All seals are helium leak tested

THREADED FLUSH FACE SEALS

Dimensional Drawing

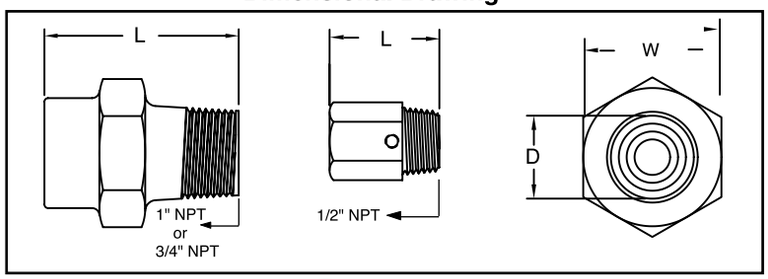

REO*TEMP*'s Flush-Face diaphragm seals are useful in applications where a continuous flow of process across the diaphragm is required to prevent solids buildup.

HOW TO ORDER

Model	Instrument Conn.	Process Conn.	Max working Pressure (@100F)	Minimum Recommended Pressure Range Gauges (psi) 2 1/2"	4"	Transducers
DSFF21S DSFF41S	1/2" NPT 1/4" NPT	1" NPT	1500 psi	0-15	0-60	30 psi
DSFF23S DSFF43S	1/2" NPT 1/4" NPT	3/4" NPT	2500 psi	0-60	N/A	15 psi
DSFF42S	1/4" NPT	1/2" NPT	5000 psi	0-100	N/A	100 psi
DSF4G1S	1/4" NPT	1" BSPP	8000 psi	0-30	0-60	30 psi

*Note: Use largest diaphragm possible, for smallest temperature effect.

Dimensions (inches)

Process Conn. NPT	Diaphragm Diameter "D"	Overall Length "L"	Width "W"
1"	1.125"	2.65"	1.75"
3/4"	.875"	2.47"	1.75"
1/2"	.675"	1.43"	.875"
1" BSPP	.980"	----	1.62"

SERIES PLS - PLASTIC SEALS

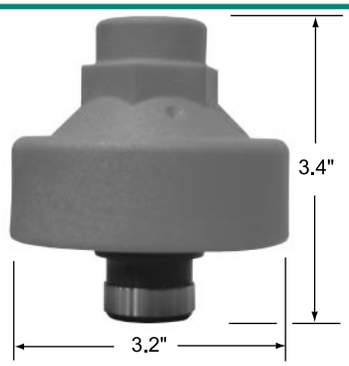

- **Teflon Diaphragm**
- **Isolate Pressure Instruments from Corrosive Media**
- **High Chemical Resistance**
- **Upper housing is glass filled polypropylene**
- **Heavy Duty Design for Safety**
- **Ideal for waste water treatment**

REO*TEMP*'s Series PLS Plastic Seals allow pressure gauges, switches, or transmitters to be used in corrosive applications compatible with wetted materials.

HOW TO ORDER

PLS1 — 4 — 4 — T — P

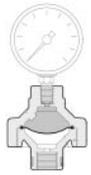

wetted

Instrument Connection:	Process Connection:	Diaphragm Material:	Lower Housing:					Options:
			Z=PVC P=Polypropylene K=Kynar (PVDF)					
4=1/4 NPT 2=1/2 NPT	4=1/4 NPT 2=1/2NPT	T= Teflon (PTFE) Bonded Hypalon	Code	*MWP at 68˚ F	*MWP at 140˚ F	*MWP at 170˚ F	Operating temp. range	-Pressure Gauge -Gauge mount & fill (glycerin or silicone)
			Z =	150 psi	15 psi	------	14/140˚ F	
			P =	150 psi	65 psi	15 psi	46/176˚ F	
			K =	150 psi	105 psi	75 psi	22/248˚ F	

*MWP = Max Working Pressure

Service Inspired, Quality Driven

OTHER DIAPHRAGM SEALS

Reotemp provides many special-use or custom diaphragm seals.
Consult factory for specific application assistance.

SADDLE

- Welded In-Line Flow-Thru
- 3" and Larger Process Pipe Sizes
- 2.4" Diaphragm

CHERRY BURELL "I" LINE

- Sanitary Seal
- 1.5", 2.0", 3.0" Diaphragm

BUTTON SEAL

- For High Pressures
- 0.9" dia. Diaphragm
- Connections: Homogenizer, Flanged, Threaded

PANCAKE

- 1.5" 2.4" & 3.5" dia. Diaphragm
- 1 1/2" to 4" ANSI flange sizes
- 150# to 600# ratings

PULP & PAPER

- 1.0", 1.4" dia. Diaphragm
- Flush Mount
- 316SS, Hastelloy C-276

IN-LINE FLOW THRU

- Annular Ring Type
- Sanitary Connectors
- Threaded type (see pg. 20)

EXTENDED TYPE

- 2.4", 2.8" & 3.5" Diaphragm
- 2", 4", 6" Ext. Lengths

TANK SPUD

- Sanitary Seal
- 2.0" & 6.0" Tank Spud Ext. Lengths available

FLUSH FLANGED

- For DP & GP Transmitters
- 1.5", 2.4", 3.5" Diaphragm
- 1 1/2 - 4" ANSI
- 150# to 600# ratings

DIAPHRAGM SEAL OPTIONS AVAILABLE

- Calibration Ring for Flanged Seals
- Gold Plated Diaphragms
- Low Volume Nipples
- Capillary

REOTEMP INSTRUMENTS
Telephone: (800) 648-7737 FAX (858) 784-0720 • sales@reotemp.com • www.reotemp.com

SERIES MS8

REOTEMP INSTRUMENTS

All-Welded *Process Seal Gauge*™

REO*TEMP*'s all-welded *process seal gauge*™ combines a high-accuracy diaphragm seal with an industrial process gauge. The unit maintains all of the integrity of a traditional bolted assembly at a more economical price. The all-welded design increases the life of your gauge by up to 3 times, while eliminating potential leak points and increasing reliability.

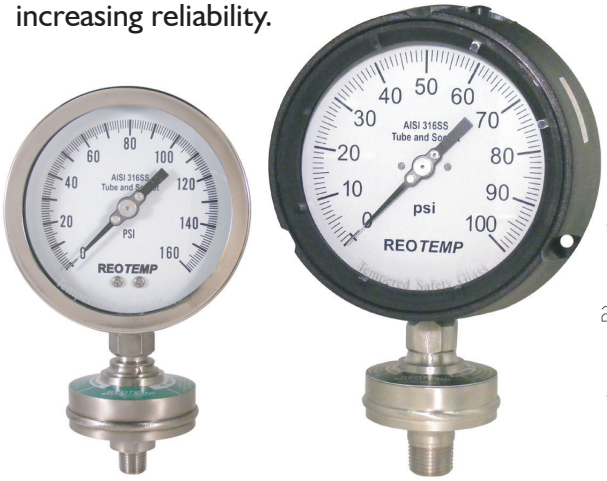

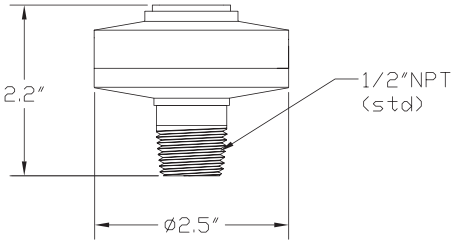

Features/Benefits:

- Increases the Life of the Gauge by up to 3x
- 1% Accuracy Full Scale
- Available up to 5,000psi
- Eliminates Potential Leak Points
- Tamper Resistant

Specifications:

Case: 4.5" Phenolic Case with Solid Front, Safety-Blowout Back (MS8PT)
4" 304 SS Case with Bayonet Ring and Safety-Blowout Plug (MS8PR)
Lens: Tempered Safety Glass
Dial: Aluminum, Black Figures on White Background
Pointer: Micro Adjustable, Black Aluminum
Wetted Parts: 316 Stainless Steel
Temperature: Ambient: 0 to 150F
Process: -30 to 450F
(consult factory for high temp service)
Max Pressure: 5,000psi

Markets:

- Oil & Gas
- Petrochemical
- Chemical
- Water
- Waste Water
- Power Generation
- And more...

HOW TO ORDER

MS8 — PT A M2 P20 S S PP ___

Dial & Case:	Mounting:	Process Connection:	Range:	Seal & Diaph. Material:	Seal Fill Fluid:	Pulsation Protection:	Options:
PT = 4.5" Phenolic case **PR** = 4" 304S.S. case **Q** = Other Instr. (transmitter or switch) mounted to seal	**A** = Bottom **C** = Lower back	**M2** = 1/2" male NPT **M4** = 1/4" male NPT **M3** = 3/4" male NPT **F2** = 1/2" female NPT **F4** = 1/4" female NPT	See p. 12 in press. catalog for range codes. **Avail. ranges:** Vacuum, compound, and 15 psi to 5,000 psi	**S** = 316 S.S Other materials avail.	**S** = Silicone DC200 **G** = Food Grade Glycerine **I** = Inert (for oxygen service) **H** = High-Temp **P** = Polypropylene Glycol Other fluids avail.	**PP** = Pulse Plus + (Recommended for severe service) **--** = None	**PXMS5** = 0.5% Acc. **G** = Glycerine Case Fill **PXHIVIS** = Hi-Vis dial yellow dial, red pointer **CCALPG-3** = Cert. of Calibration

Distributed by:

REO*TEMP* Instruments San Diego, CA U.S.A.
Ph (800)648-7737 sales@reotemp.com
Fx (858)784-0720 www.reotemp.com