Pressure Switch

TPS-11

Hermetically Sealed Pressure Controller

FUNCTIONAL CHARACTERISTICS

- Hermetically sealed snap microswitch
- Welded 316 stainless steel sensor
- Completely sealed enclosure
- SPDT or DPDT output
- Adjustable working range
- Terminal modular wiring

PRODUCT OVERVIEW

TPS11 Series is build with hermetically sealed snap microswitch, SPDT or DPDT output is available, compact enclosure, internal reference dial for field adjustment, suitable for applications where potentially explosive or corrosive atmospheres exist. It is an ideal choice for water pipeline, wastewater treatment, pulp and paper mills, food processing, petrochemical and pharmaceutical plants.

Pressure Switch

TPS-11

Technical Specifications

	-50～80℃	Working temperature:
	± 1% (± 1% of range)	Set-point error:
	Die cast aluminum, epoxy coated	Enclosure:
	SPDT veya DPPT	Switch output:
	5A 125/250/480 VAC resistive	Electrical rating:
	0.9 KG approx, depending on models	Weight:
	NPTF½" (connection)	Electrical connection:
	Please see the illustration below	Pressure connection:
	2.5G, 5 — 500Hz	Vibration-proof:
	IP65	

Dimensions (mm.)

Optional Pressure Sensors Note:To select a pressure sensor considering process media and working range.

Model: 121-125

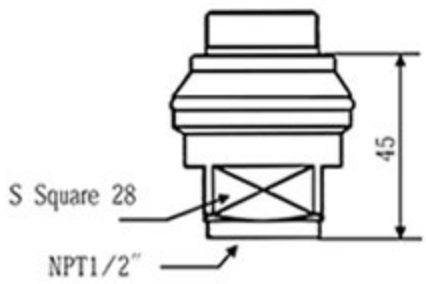

Model: 141-145

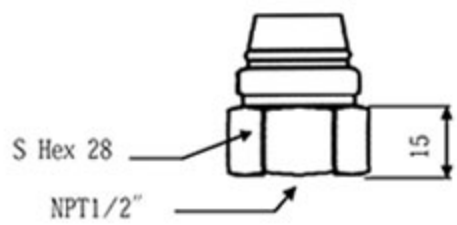

Model: 361-365

Model: 101-104

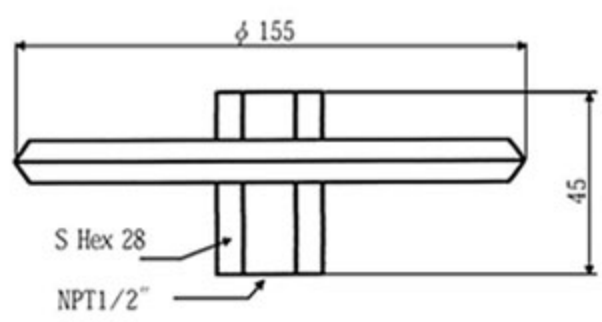

Eryaman AVM. 2.Cad.No:11/50 06793 Ankara-TURKEY • Tel: +90 312 279 44 51 • Fax: +90 312 279 55 58 • e-mail: info@teknopoli.com • web: http://www.teknopoli.com

Pressure Switch

TPS-11

Dimensions (mm.)

Range	A	Thread
01～04	203.2	NPT 1/2"
41～45	168.3	NPT 1/2"
61～65	177	NPT 1/2"
21～25	190.6	NPT 1/2"

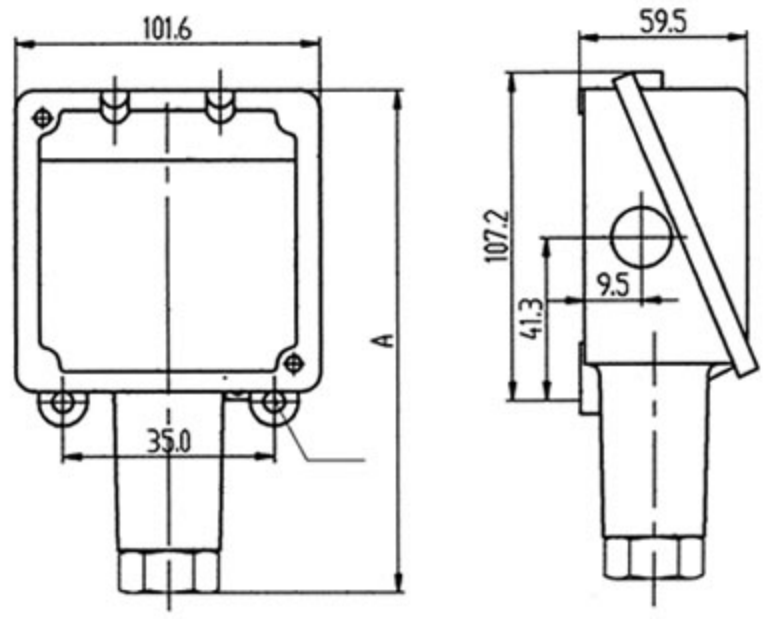

Range available

Sensor Category	Model	Sensor	Range (MPa)	Proof Pressure (MPa)	Differential (Mpa)
1	01	Welded stainless steel diaphragm AISI 316 SS	0.35	0.9~5.7Kpa(6)	⩽ 10%
	02		0.35	1.5~9.5Kpa(10)	⩽ 10%
	03		0.35	2.4~15.2Kpa(16)	⩽ 10%
	04		0.35	3.75~23.75Kpa(25)	⩽ 10%
	21	Welded stainless steel diaphragm AISI 316 SS	3.4	0.015~0.095(0.1)	2~5Kpa
	22		3.4	0.024~0.152(0.16)	1~10Kpa
	23		3.4	0.0375~0.2375(0.25)	2~13Kpa
	24		3.4	0.06~0.38(0.4)	2~12Kpa
	25	Welded stainless steel diaphragm AISI 316 SS	3.4	0.09~0.57(0.6)	5~20Kpa
	41		10	0.15~0.95(1)	0.02~0.095
	42		10	0.24~1.52(1.6)	0.02~0.12
	43		10	0.3~1.9(2)	0.022~0.15
	44		10	0.375~2.375(2.5)	0.02~0.11
	45		10	0.6~3.8(4)	0.02~0.2
3	61	AISI 316 SS Plunger Buna-N sealing ring	40	0.9~5.7(6)	0.4~0.6
	62		40	1.5~9.5(10)	0.4~0.85
	63		40	3.75~23.75(25)	0.4~1.6
	64		68	6~38(40)	0.5~2.5
	65		68	9~57(60)	⩽ 10%

Eryaman AVM. 2.Cad.No:11/50 06793 Ankara-TURKEY • Tel: +90 312 279 44 51 • Fax: +90 312 279 55 58 • e-mail: info@teknopoli.com • web: http://www.teknopoli.com