Hoffer's Most Economical Flow Solution...

Lo-Co Series Turbine Flowmeters for Liquid Service

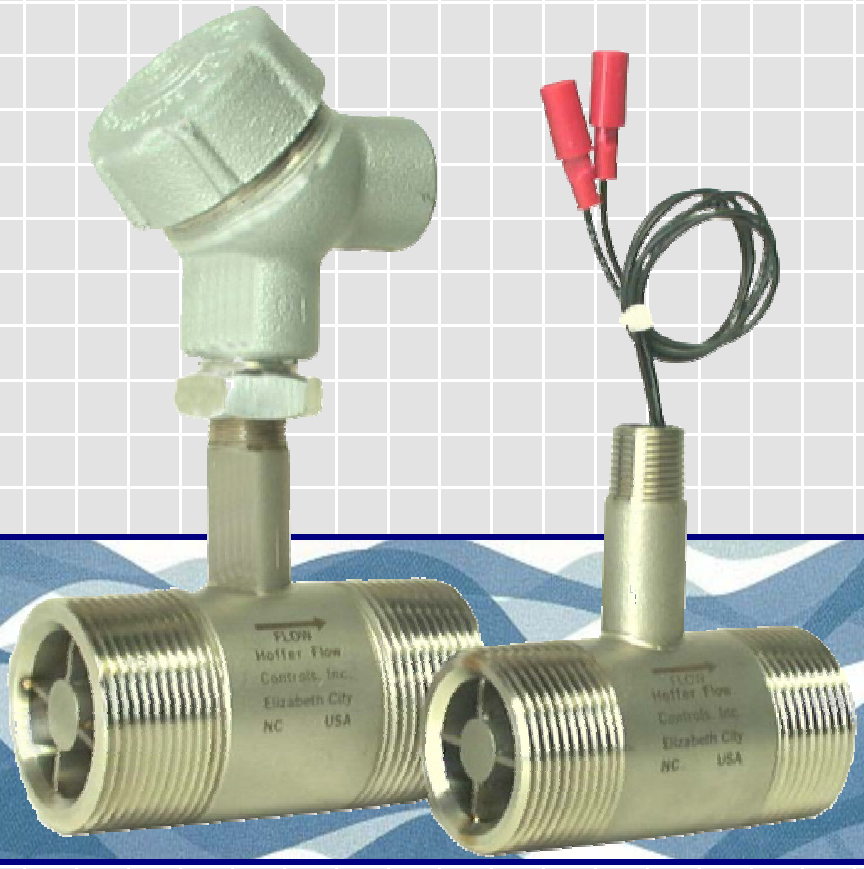

HOFFER FLOW CONTROLS, INC.

Perfecting Measurement ™

Introduction

Hoffer Flow Controls presents the Lo-Co Series of low cost turbine flowmeters for customers working with a limited budget, a line that is a perfect fit for liquid utility and OEM applications. The Lo-Co Series provides you with the most economical flow solution while its outstanding features such as ALL stainless steel construction and precision machined components speak for themselves. The Lo-Co Series is available in nine line sizes and may be interfaced with our complete line of electronics including signal conditioners, converters, rate indicators/totalizers and flow computers.

Features:

- Rugged, industrial meter with ALL stainless steel construction.
- All components are precision machined.
- Dependable and economical flow solution.
- Nine sizes available, ¼" thru 2".
- CE Compliant.
- Private label versions available. Contact factory.
- Hard carbon composite sleeve bearing provides for compatibility with almost all corrosive fluids, as well as, non-corrosive liquids. This bearing works exceptionally well on all types of water flow applications including deionized, demineralized, and potable water.
- Available with a PET signal conditioner/converter. For more information on the PET Series, see PET Technical Data Sheets (PET-XXX) and (PET-PSC-XXX).

Operating Principle

Fluid entering the Hoffer turbine flowmeter passes through an inlet flow straightener which reduces the fluid's turbulent flow pattern and improves the velocity profile. The fluid engages a vaned rotor causing it to rotate at an angular velocity proportional to flow rate. The pickup coil senses the spinning motion of the rotor through the housing and converts it into a pulsing electrical signal. Summation of this signal relates directly to the total flow, while the frequency is linearly related to flow rate.

Specifications:

Materials of Construction:	All 316 stainless steel with 17.4 PH rotor.
Linearity:	±1%.
Repeatability:	± .1% of reading.
Temperature Range:	-150°F to +250°F.
Available Turndown Range:	See chart.
Bearing Style:	Hard carbon composite bearings standard.
End Fittings:	Available in NPT and screw on flanges.
Coil:	Magnetic pickup coil supplied with pigtail leads. (Approximately 6" lead length with crimped insulated disconnects).
Riser:	⅜" MNPT riser. Optional ex-proof enclosure available.
Calibration:	Average K-Factor on water and etched on body. (See chart).
Approvals:	CE Compliant.

Cutaway Drawing

The Lo-Co Series flowmeter incorporates a simplified version of internal construction when compared to most other turbine flowmeters. The unique three-piece internal construction employs two hangers (flow straighteners) and a rotor assembly with a hard carbon composite sleeve bearing press fit into the hub of the rotor. The downstream hanger includes a shaft on which the rotor assembly rides and is supported. The flow straightening sections are tack welded into place to provide for added durability in abrasive flow applications.

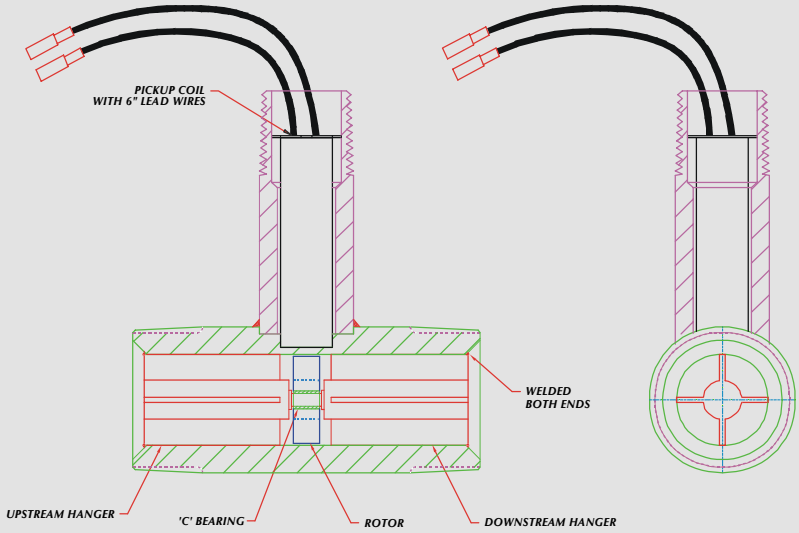

Size Selector Chart for Lo-Co Series

Size	End Connections	Flow Range (GPM)	Pressure Drop (in PSIG @max normal flow)	Burst Pressure (in PSIG)	Recommended Max. Working Pressure (With safety of 4)	Typical K Factor Pulses/ gallon	Nominal Max. Frequency (Hz)	Weight (Lbs.) Standard	Weight (Lbs.) With coil enclosure
¼"	½"	.45 – 4.5	6	20,000	6,000	15,800	1,054	.45	.70
3/8"	½"	.8 – 8	7.5	20,000	6,000	9,850	1,314	.43	.70
½"	½"	1.5 – 10	7	18,000	6,000	8,975	1,496	.43	.70
5/8"	½"	1.7 – 17	4	18,000	6,000	5,400	1,530	.40	.70
¾"	¾"	3 – 30	8	9,000	4,400	2,175	1,088	.50	.75
1"	1"	6 – 60	11	9,000	3,850	800	934	.80	1.05
1¼"	1¼"	10 – 100	8	9,000	3,850	410	684	1.30	1.55
1½"	1½"	13 – 130	7	9,000	3,500	226	490	1.72	1.97
2"	2"	15 – 225	6.5	9,000	3,000	135	506	2.80	3.05

Mounting Positions

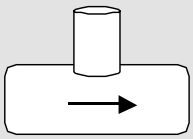

Horizontal – Coil may be located in any 360º axis.

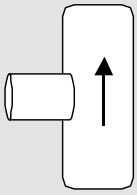

Vertical – Flow direction up.

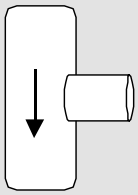

Vertical – Flow direction down. Only acceptable if adequate back pressure is provided on the downstream side (after) the flowmeter.

Typical Applications

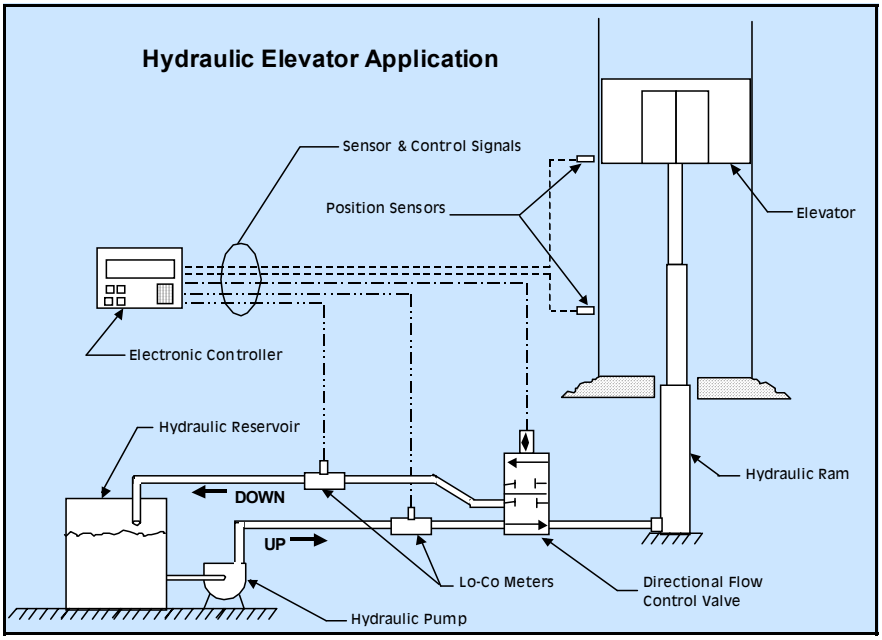

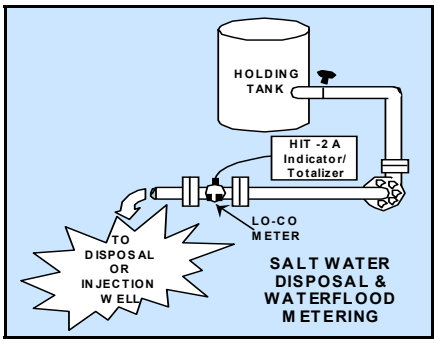

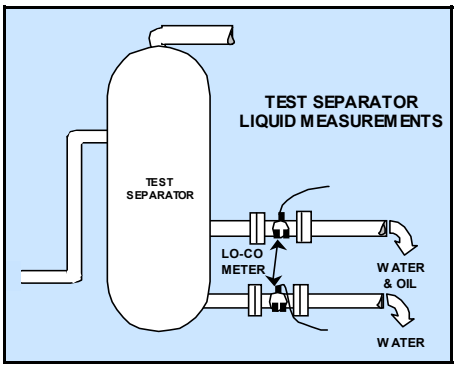

Ordering Information

Basic Model Number LC (A) X (B) - (C) - (D) - (E) - (F / G) - (H) - (I)

A. Process Connection/End Fitting Size

B. Flowmeter Size

C. Minimum Operating Flow (GPM)

D. Maximum Operating Flow (GPM)

E. Bearing Type

(C)	Hard Carbon Composite Sleeve Bearing, all sizes

F. Pickup Coils

(1M)	One Magnetic Coil

G. Riser & Explosion-Proof Coil Enclosure (Rated Class I, Groups C & D)

(X)	3/8" MNPT Riser only. Welded to body.
(XB-1)	PET-1 w/ 0-10 VDC analog output mounted in enclosure.
(XB-3)	PET-3 w/ 4-20mA analog output, 3-wire, mounted in enclosure.
(XB-4)	PET-4 w/ TTL/CMOS (0-5 VDC) output, mounted in enclosure.
(XB-5)	PET-5 w/ 0-10 VDC Square wave pulse output, mounted in enclosure.
(XB-6)	PET-6 w/ open collector output, mounted in enclosure.
(XB-7)	PET-7 w/ 4-20mA analog output, 2-wire, mounted in enclosure.
(ELBY)	Riser and enclosure only, mounted. (No PET).
(3B/O-ATEX-A)	Meets ATEX requirements, includes a mounting adapter.
(XD-AD)	3/4" Male NPT coil riser with enclosure. Approvals: IEC, ATEX, FM, CSA, IP66 and NEMA4X.
(A)	Any other type enclosure, requires a mounting adapter.

Elby Type Enclosure: Meets Class I, Div. 1 and 2, Groups B, C & D. Class II, Div. 1 and 2, Groups E, F & G. Class III.

H. Process Connection/End Fitting

(NPT)	Male NPT pipe thread
(SNPT1CS)	Screw on flanges per ANSI, 150# C/S
(SNPT3CS)	Screw on flanges per ANSI, 300# C/S
(SNPT1SS)	Screw on flanges per ANSI, 150# S/S
(SNPT3SS)	Screw on flanges per ANSI, 300# C/S

Notes:
1) Must be same size threads as Lo-co.
2) Oversized flanges available upon request.
3) 150# or 300# maximum rating in S/S or C/S.

I. Special Features

(CE)	CE Mark required for Europe
(PED-CE)	PED-CE Mark required for Europe
(SR)	Strain relief required when a cable is attached to the Elby enclosure
(SEP-CE)	Sound Engineering Practice.

Please supply the following basic information so that Hoffer Flow Controls can evaluate your application and correctly size the appropriate Hoffer turbine flowmeter.

1. Service liquid.
2. Minimum and maximum flow rate.
3. Minimum and maximum operating pressure.
4. Minimum and maximum operating temperature.
5. Line size.
6. Viscosity (If applicable).
7. Functional description (What information do you require from the meter?).
8. Reference PET Series for signal conditioners/converters.

HOFFER FLOW CONTROLS, INC.
107 Kitty Hawk Lane, P. O. Box 2145, Elizabeth City, NC 27906-2145
800-628-4584 252-331-1997 FAX 252-331-2886
www.hofferflow.com *E-mail: info@hofferflow.com*

Dimensional Drawings

Lo-Co without Coil Enclosure

Size	A	B	C
½" x ¼"	2.500	2.09	½" NPT
½" x 3/8"	2.500	2.09	½" NPT
½" x ½"	2.500	2.09	½" NPT
½" x 5/8"	2.500	2.09	½" NPT
¾"	2.500	2.23	¾" NPT
1"	3.000	2.31	1" NPT
1¼"	3.250	2.51	1¼" NPT
1½"	3.500	2.60	1½" NPT
2"	4.000	2.86	2" NPT

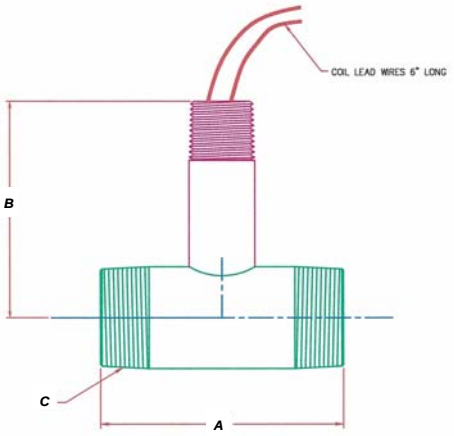

Lo-Co with Coil Enclosure

Size	A	B	C
½" x ¼"	2.500	4.85	½" NPT
½" x 3/8"	2.500	4.85	½" NPT
½" x ½"	2.500	4.85	½" NPT
½" x 5/8"	2.500	4.85	½" NPT
¾"	2.500	4.95	¾" NPT
1"	3.000	5.06	1" NPT
1¼"	3.250	5.25	1¼" NPT
1½"	3.500	5.25	1½" NPT
2"	4.000	5.59	2" NPT

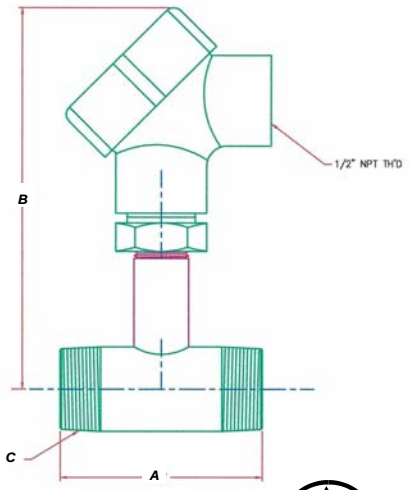

The quality system covering the design, manufacture and testing of our products is certified to International Standard ISO 9001.

TÜV Rheinland of North America
ISO9001 Registered Company